Photo by Michael Dziedzic

Marjoke de Boer

University of Applied Science Utrecht

Understanding how the value chains of e-bus public transport work for six European regions

eBussed
Interreg Europe

European Union
European Regional
Development Fund

Understanding how the value chains of e-bus public transport work for six European regions

The Interreg Europe eBussed project supports the transition of European regions towards low carbon mobility and more efficient transport. The regions involved are Turku (Finland), Hamburg (Germany), Utrecht (The Netherlands), Livorno (Italy), South Transdanubia (Hungary) and Gozo island in Malta. It promotes the uptake of e-busses in new regions and supports the expansion of existing e-fleets.

Within the project, there are four thematic working groups formed that aim at delivering a best practices report and policy recommendations to be used in the partner regions. Thematic Working Group 4 (TWG4) focusses on the topics of Procurement, Tendering and Costs of e-busses. As a starting point for TWG4, the value chain for e-bus public transport per region has been mapped. By mapping how the value chain for e-bus public transport works and defining the nature of the issues, problems or maybe challenges per region can be better understood.

Concepts

Value chain; Michael Porter describes a value chain as: “A collection of activities that an organization carries out to create value for its customers. Value creation generates added value, which leads to competitive advantage. Ultimately, added value also ensures a higher profitability of an organization.” (1985) In this case, the concept is used to visualize the entire chain of activities to provide emission free-public transport and to look in particular at the parties that add value to the chain.

Asset management is a systematic process of developing, operating, maintaining, upgrading, and disposing of assets in the most cost-effective manner (ISO 55000). In this case, we define assets as objects in the value chain that are of value to the stakeholders, namely Energy production, Electric infrastructure, Charging infrastructure, Electric buses and Transport service. When mapping the value chain the following roles are distinguished; Asset owner, asset manager and service provider. The asset owner indicates the goals and frameworks at a strategic level and has prime contact with all main stakeholders. The asset manager translates abstract performance and functions into specific performance and functions, conducts performance analyses and develop adapting maintenance strategy scenario’s; realize performance within budget (create value for money, address risk management). The service provider provides the daily operation, realizes the performance and organizes the maintenance.

Combining value chain with asset management

When regions switch from driving with diesel buses to driving with e-buses, the way of working together changes; in the relative simple collaboration chain between the concession provider and the transport company, new players enter the field; the suppliers and providers of electricity. It makes the collaboration a bit more complicated. Engineering firm Witteveen en Bos (2017) defined two forms of organizing the collaboration chain as an energy triangle and a transport triangle, and they both have to work together.

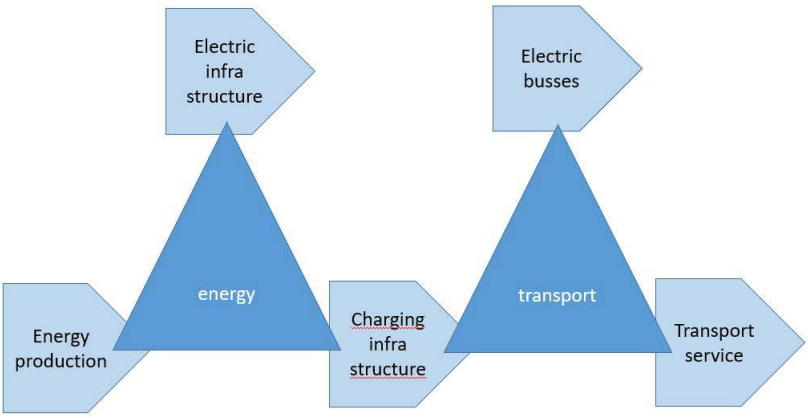

Figure 1
Schematization used in the case of the value chain of e-bus public transport

In combining asset management roles and value chain, multiple options arise between the regions. Each region has mapped the companies that are responsible for the asset roles in the value chain of e-bus public transport.

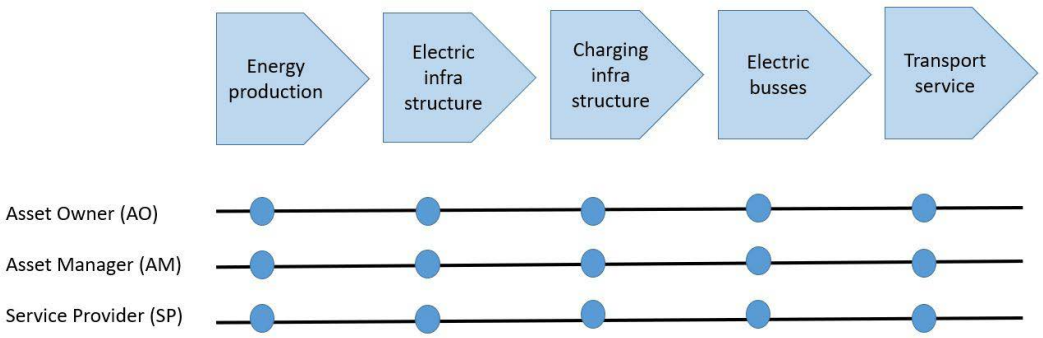

Figure 2
A basic schedule that has been used to map parties in asset management

Within the eBussed project, some regions that already use e-buses and regions that do not yet run e-buses. Regions with e-buses are Utrecht, Hamburg, Turku and Pécs (South Transdanubia). Whereas Livorno, Gozo and Paks (South Transdanubia) do not yet run e-buses.

Mapping the value chains

Mapping the value chains of the different regions from eBussed leads to the next insights regarding the ownership of assets and their relationship in the value chain. Per region one scheme provides the names of the companies involved and the other scheme shows the division of public (in red) and private companies (in green).

Utrecht

What stands out, compared to the other value chains, is that there is a separate role and company for the energy production and that all the companies involved in the value chain are privately owned. The value chain is based upon competition to handle as efficiently as possible with the investments, which are made with public money.

The transport company Qbuzz has bought the e-buses in Utrecht. Their purchase to e-bus suppliers also included the purchase of charging infrastructure. So, for example Ebusco, as a bus supplier, also supplies the charging infrastructure in their quotation. If Ebusco makes that offer with ABB, then ABB will be on board. In this case, ABB does not only supply the charging station but also the service contracts for their goods, that has a relation with safety and guarantees.
With buses (and trams) it is common for maintenance parties to carry out the work other than the vehicle supplier.

Mapping the (combined) roles in value chain during the pilot phase in Utrecht

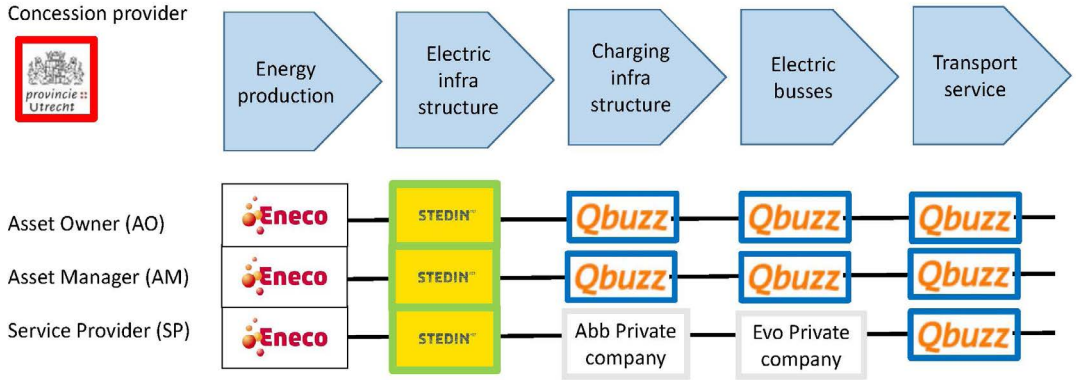

The transport company Qbuzz has outsourced its maintenance for its entire fleet to EVO. This was not done specifically for the e-buses, but at the start of the concession for the entire fleet. EVO has also set up / staffed the workshop at the parking facility. Several providers who do this, Qbuzz has bound EVO with this concession as their supplier of these services. That's why the e-buses also end up with this Service Provider.

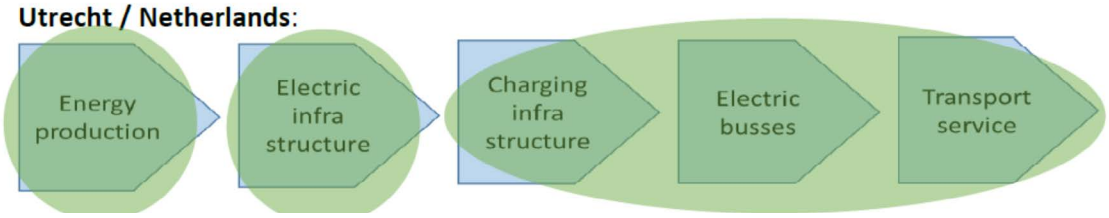

The energy production is mostly local and partly European, it comes from Dutch gas, Dutch wind and European solar energy.

Because parties depend on market forces, they are sensitive to more difficult economic times as is in the present time in relation to the measures against Covid-19. Transport companies have fewer travellers as before. Will they still be able to make the necessary investments?

Hamburg

There are two transport operators in Hamburg: Hochbahn (HHA) and Verkehrsbetriebe Hamburg-Holstein (VHH). Hochbahn is 100% owned by the City of Hamburg, while the city owns approx. 94% of VHH. The remaining shares are owned by four adjacent districts. Due to the ownership, the City of Hamburg can award a contract directly without having to procure transport

Mapping the (combined) roles in value chain during the pilot phase in Hamburg (Hochbahn)

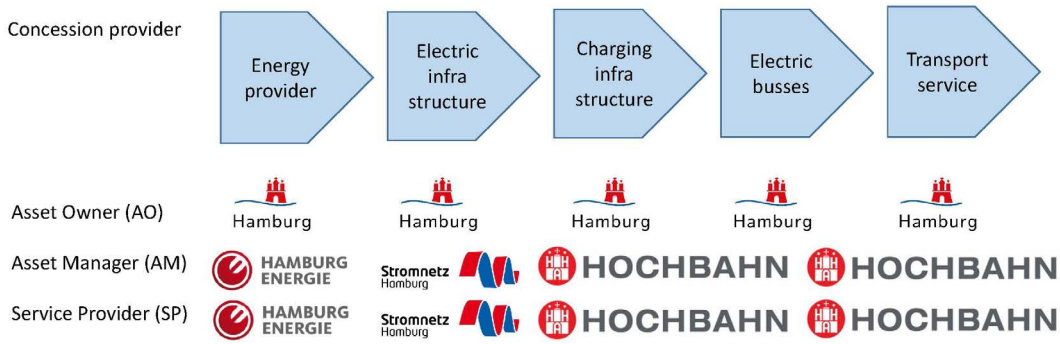

services. In the case of the regional districts, they procure transport services and there is a competitive procedure. Thus, VHH has some uncertainty regarding their business strategy and they cannot abandon diesel buses completely. For the City of Hamburg, it was a political decision to change from combustion engines to electrical vehicles for public transport and it has been imposed on the transport operators. For the districts, it is a question of money and what they can afford. The Revised Clean Vehicle Directive (Directive (EU) 2019/1161), entering into force in August 2021, might change the situation.

Mapping the (combined) roles in value chain during the pilot phase in Hamburg (VHH)

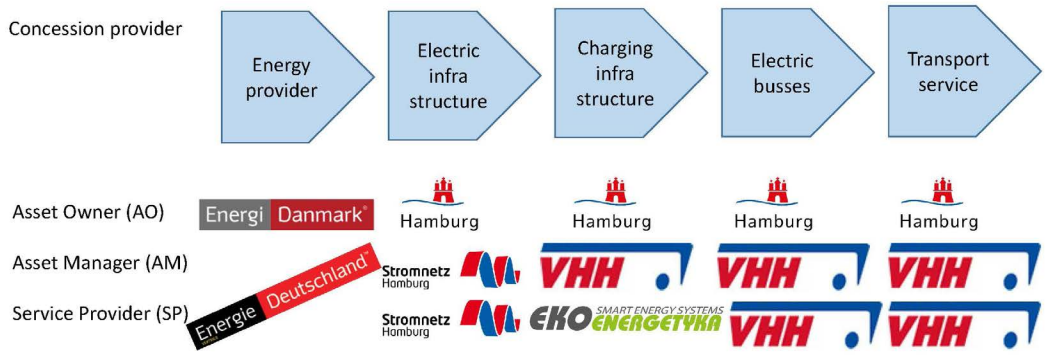

Stromnetz Hamburg, a city-owned company, owns and maintains the electrical grid. They get paid by the energy providers for using the grid. The energy is being bought at energy stock exchanges world-wide by energy providers. The City of Hamburg procures the energy demand for all of its companies and public administration. At the moment, Energievertrieb Deutschland is the energy provider. They are a subsidiary to Energi Danmark. However, the City of Hamburg has its energy provider too, namely Hamburg Energie. They provide 100 % of electricity from high-quality renewable sources (not older than six years, investing in new power plants). Hamburg Energie does not buy the electricity they sell at the global energy stock exchanges but has direct delivery contracts with the producers (water, wind, solar).

The electrical infrastructure on the premises of VHH are managed by them but serviced by Ekoenergetyka, a Polish company that won the tender.

The result of this layout is that it's a solid situation, there is little competition, no one is expected to go bankrupt, but policymaking takes its time.

Turku

Electricity is produced by an energy company owned by the municipality (public). A subsidiary of the energy company (public) owns and operates the electric infrastructure as well as the charging infrastructure.

Public transportation in the region is organized by a company owned by several municipalities in the region (public). The regional public transportation company tenders bus operation service from several private bus operators and one municipality-owned subsidiary. Electric buses are owned and operated by the bus operator owned by the municipality (public). A private company that delivered the buses is responsible for the maintenance.

Mapping the (combined) roles in value chain during the pilot phase in Turku

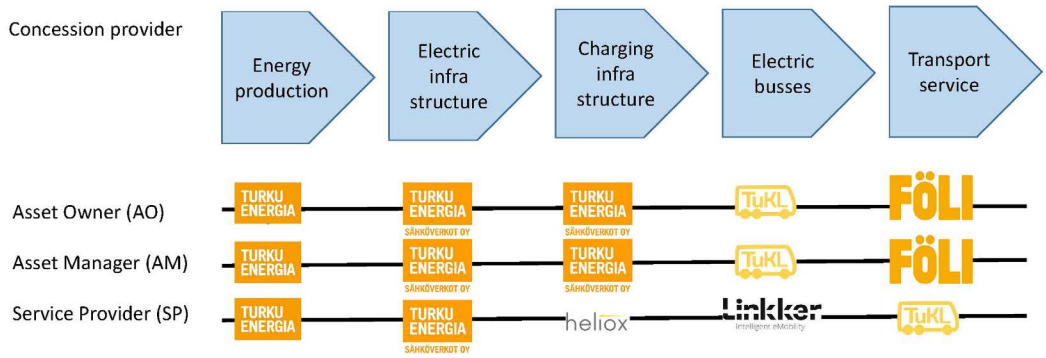

Pilot phase (2016-) has been operated by the municipality-owned subsidiary since none of the private operators showed particular interest in participating in the e-bus pilot. The public transportation company has not demanded e-buses in the tenderings, but in the latest tenderings, the tenderers have gained extra points for offering e-buses. First privately operated e-buses will be seen in Turku in July 2021.

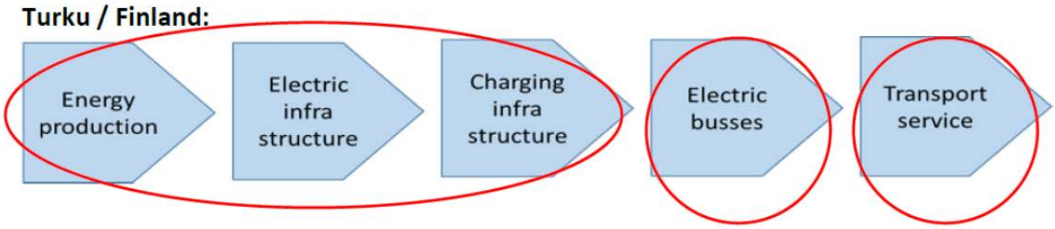

Pécs and Paks

Regarding both Pécs and Paks, there are different companies in the value chain, but the setup is the same. What stands out, compared to the other value chains, is that there is a separate role for the Transport Service.

Mapping the (combined) roles in value chain during the pilot phase in South Transdanubia – Pécs, Tükebusz Zrt.

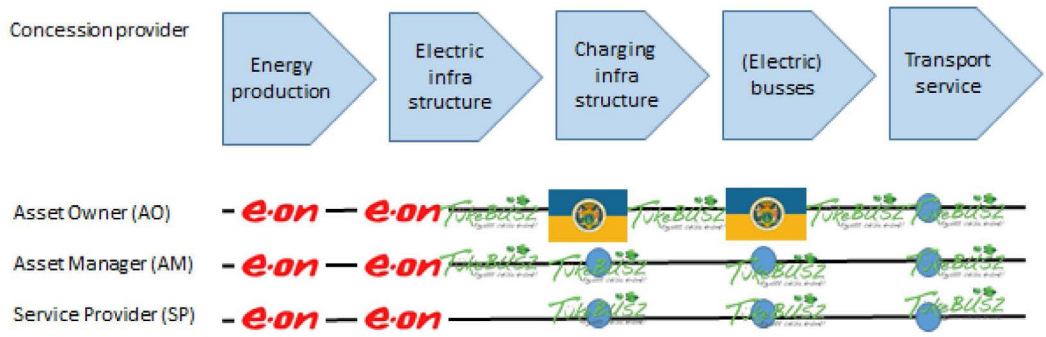

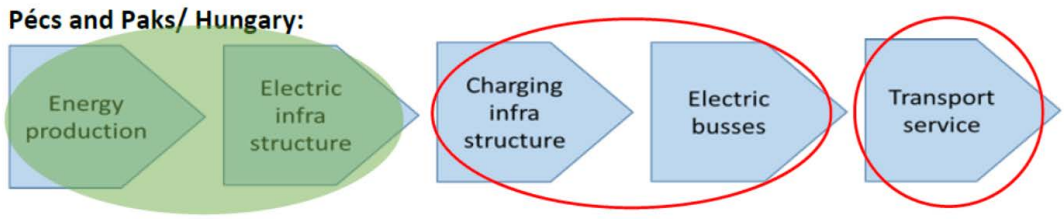

The energy production comes from a nuclear power plant, so its locally produced energy. The plant and the electric infrastructure are owned by a private company. This is a historically developed situation. Charging infrastructure and electric buses are public companies, owned by the municipality. Transport service is a public company owned by the state as a result from the Russian influence in the fifties and sixties. Decisions regarding public transport are mostly made by the central government, the execution and administration are mostly performed on a local level.

Mapping the (combined) roles in value chain during the pilot phase in South Transdanubia – Paks, Paks Transport Ltd.

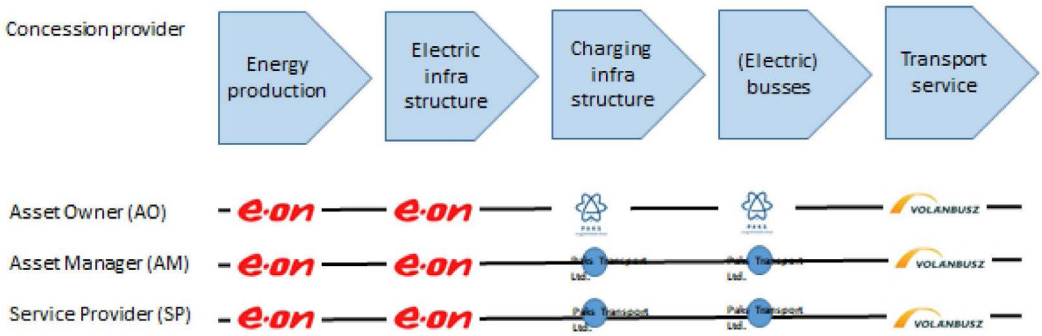

Livorno

The situation as indicated is about the only operating electric train in the Province of Livorno, regarding the buses for Public Transport there is no charging infrastructure available yet.

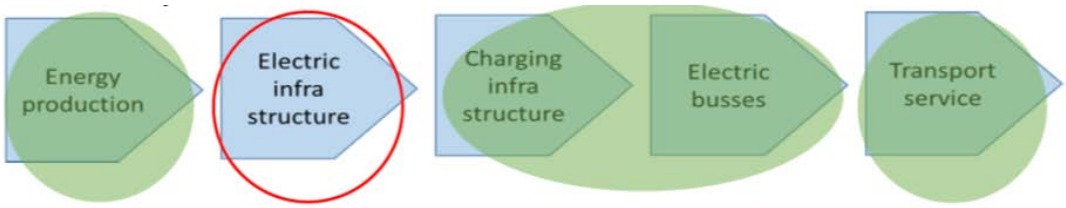

Mapping the (combined) roles in the value chain in Livorno

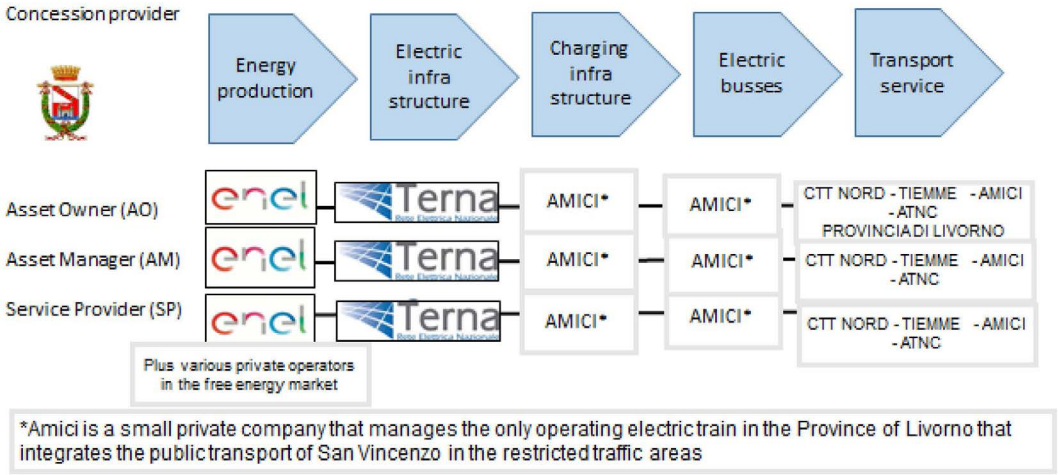

The energy production is a company with public and private funds, electric infrastructure is a public company. Buses are owned by a private company. In the future, when driving with e-buses it is expected that the charging infrastructure will be a private company and the e-buses will be financed with public capital.

Malta / Gozo

At Gozo, there are at the moment no e-buses operative. Malta and Gozo are two separate islands, they have the same government and Gozo has its ministry which includes Public Transport.

Mapping the (combined) roles in the value chain in Gozo / Malta

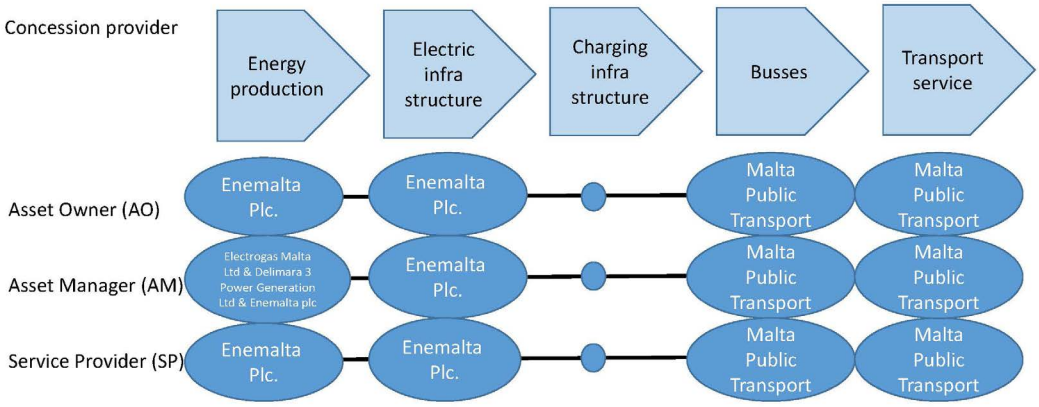

Energy production and electric infrastructure are separate parts of a public company. Buses and transport service are private companies. When driving with e-buses there will be a different situation because the e-buses are owned by the ministry from Gozo.

When working with e-buses, who will own the charging infrastructure? There is at the moment no preference, it will probably be a practical solution, this is one of the items Gozo would like to learn from the other regions how they made their choices.

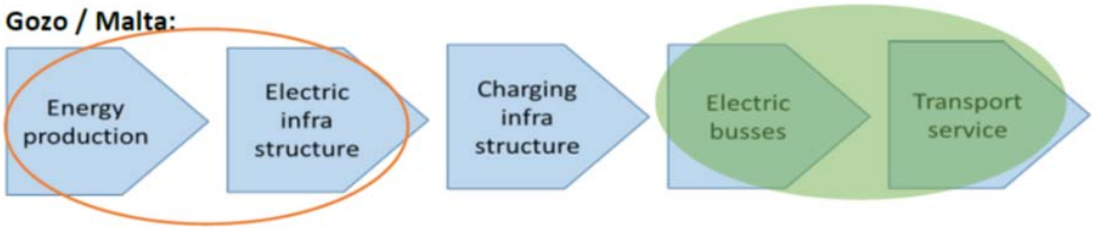

Conclusions

Each region in the project eBussed has a different value chain in the sense of division into public and private companies in the value chain and their roles. Utrecht has a value chain consisting of private companies, Hamburg and Turku have value chains consisting of public companies. The other regions have a mix of public-private companies in their value chain.

In its pilot case, Utrecht has a chain of private companies working together, the main objective is working price consciously. A private company owns the e-buses, the difficulty hereby is that the lifespan of the e-buses is longer than the term of the concession. What will happen with the ownership of the e-buses after the concession period? There is an obligation to buy the buses from the previous concession taker, but because of the great investment, it is a problem that is not completely been solved. In Hamburg and Turku during its pilot phase, the municipality owns the charging infrastructure and the e-buses, this means that the services do not have to be tendered and there is little chance for disruption. That leads to the question: who owns the buses? What are sensible options?

Remarkable is that in Hungary the transport services are separately organized from the transport triangle. It is a result of a way of working in the past.
Another remarkable fact is that the charging infrastructure sometimes belongs to the energy triangle and sometimes to the transport triangle. It leads to the question: who owns the charging infrastructure? What are sensible options?

The diversity of structures within the value chains shows the importance of collaboration. Regardless of whether the stakeholders are private or public, and whether several links of the chain are in one organization or divided between several organizations, they need to cooperate and coordinate their activities well to be successful.

Written with contributions from

Martijn Rietbergen, Stephanie Keßler, Aleksi Heinonen, Markku Ikonen, Zsolt Pálmai, Ivo Tartaglia, Alessandro Franchi, Joseph Piscopo, Mandy Gauci, Jeroen Golstein and David Eerdmans.

www.interregeurope.eu/ebussed

eBussed project supports regions in the transition towards low-carbon mobility and more efficient public transport in Europe by promoting the use of e-buses.